PRINT 1:1 ON 11"X17"
DO NOT SCALE
DIMENSIONS IN MM [INCHES]

Reference Installation
Guide, PN 75-001164-01
Appendix A

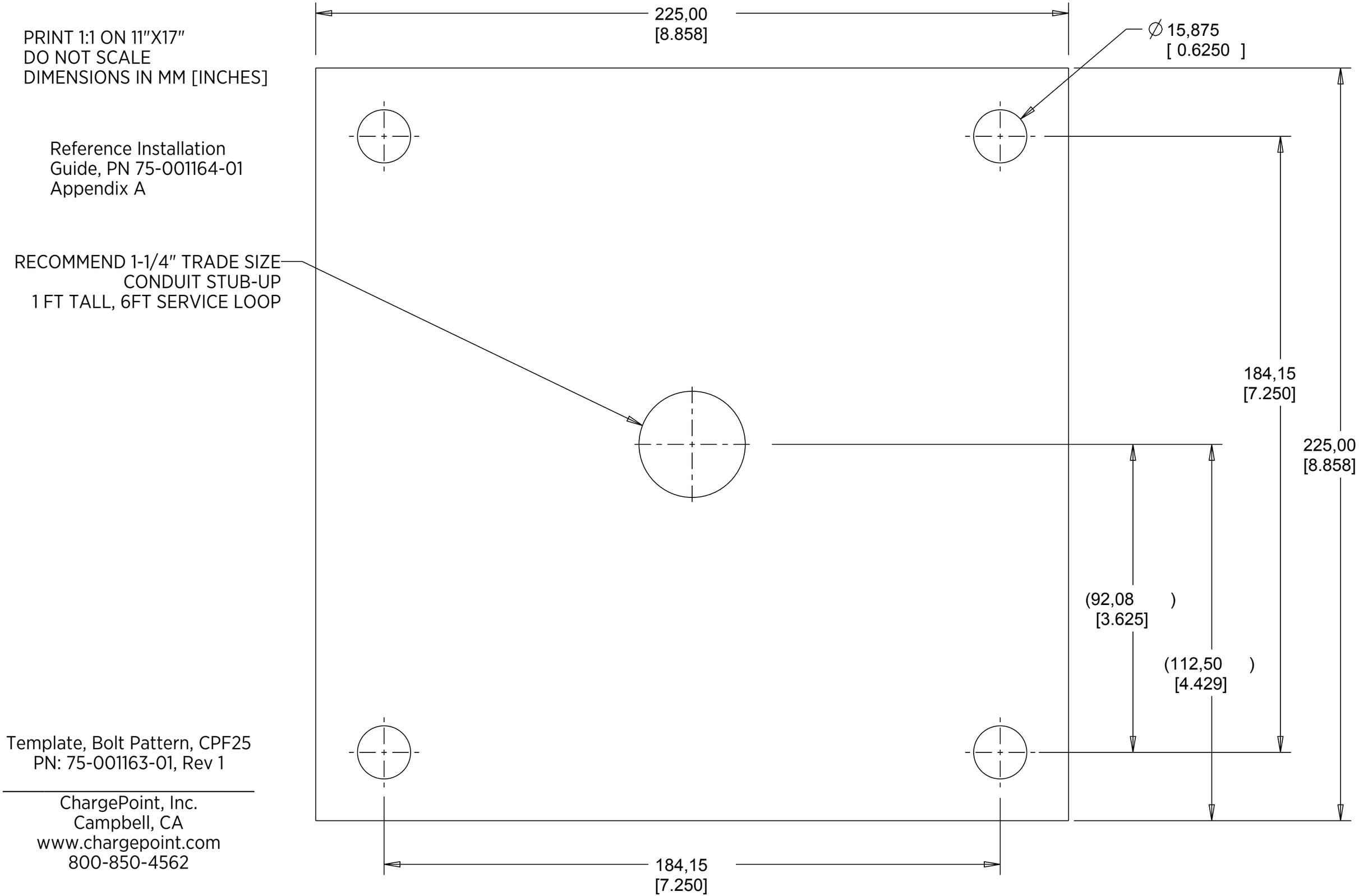


Template, Bolt Pattern, CPF25
PN: 75-001163-01, Rev 1

ChargePoint, Inc.
Campbell, CA
www.chargepoint.com
800-850-4562